Calavera del Musico

Daniel Velazquez

Product Description and Creative Ideation

The idea for this product originated from the Mexican tradition of creating sugar skulls to honor the dead on Dia de los Muertos. They signify the cycle of life and death and the importance of remembering the dead. After visiting Mexico almost every year, I have come to love the music of mariachi bands, so it was very important for me to incorporate that into the design.

UnTiED ideation element: Absurdity
Design Heuristic Cards:

- 39 (incorporate environment)
- 40 (incorporate user input).
- 67 (unify)

This product is unique because it combines aspects of Mexican culture, specifically music and vegetation. The top of the skull features part of a mariachi sombrero, a symbol of pride and heritage in Mexican culture, and a common element in mariachi bands' uniforms.

Thumbnail Sketches and Perspective View

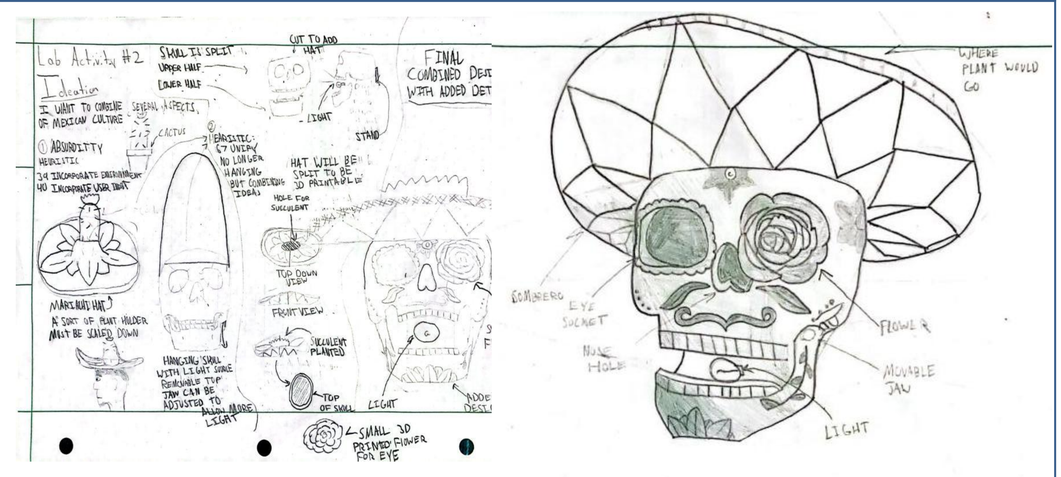

Multi-views, Section Views and Assembly Drawings

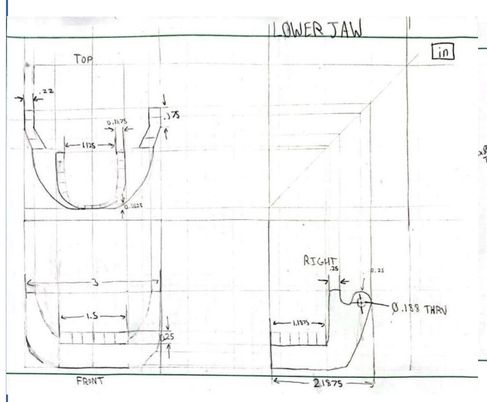

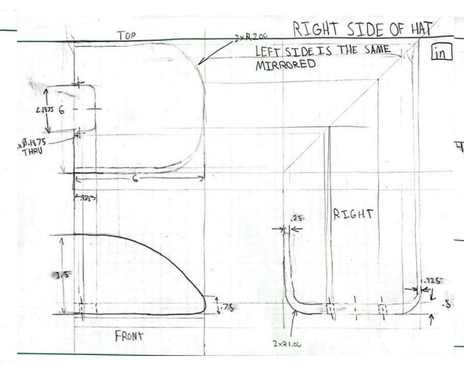

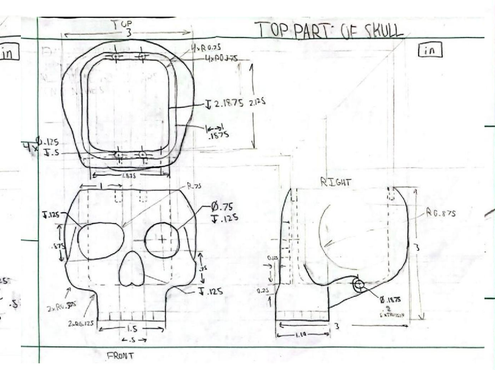

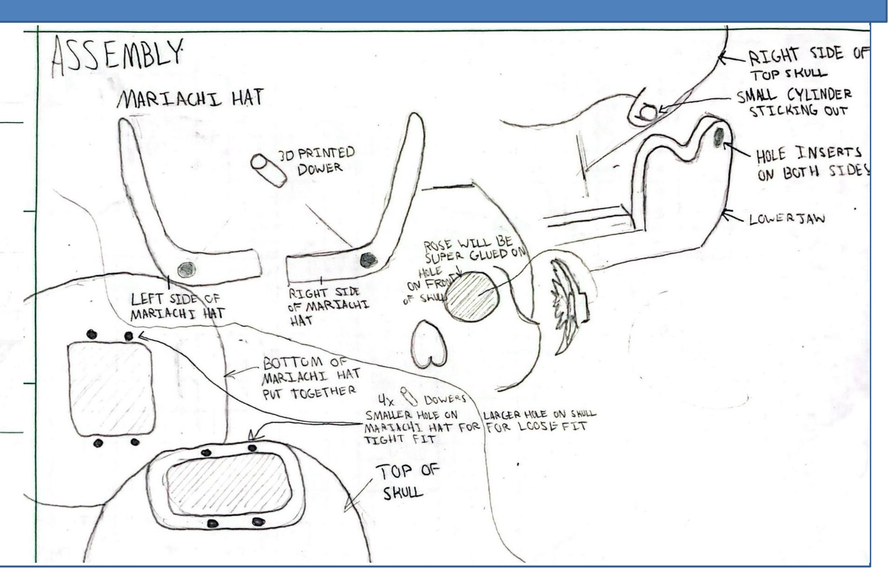

Rendered Part and Assembly Views

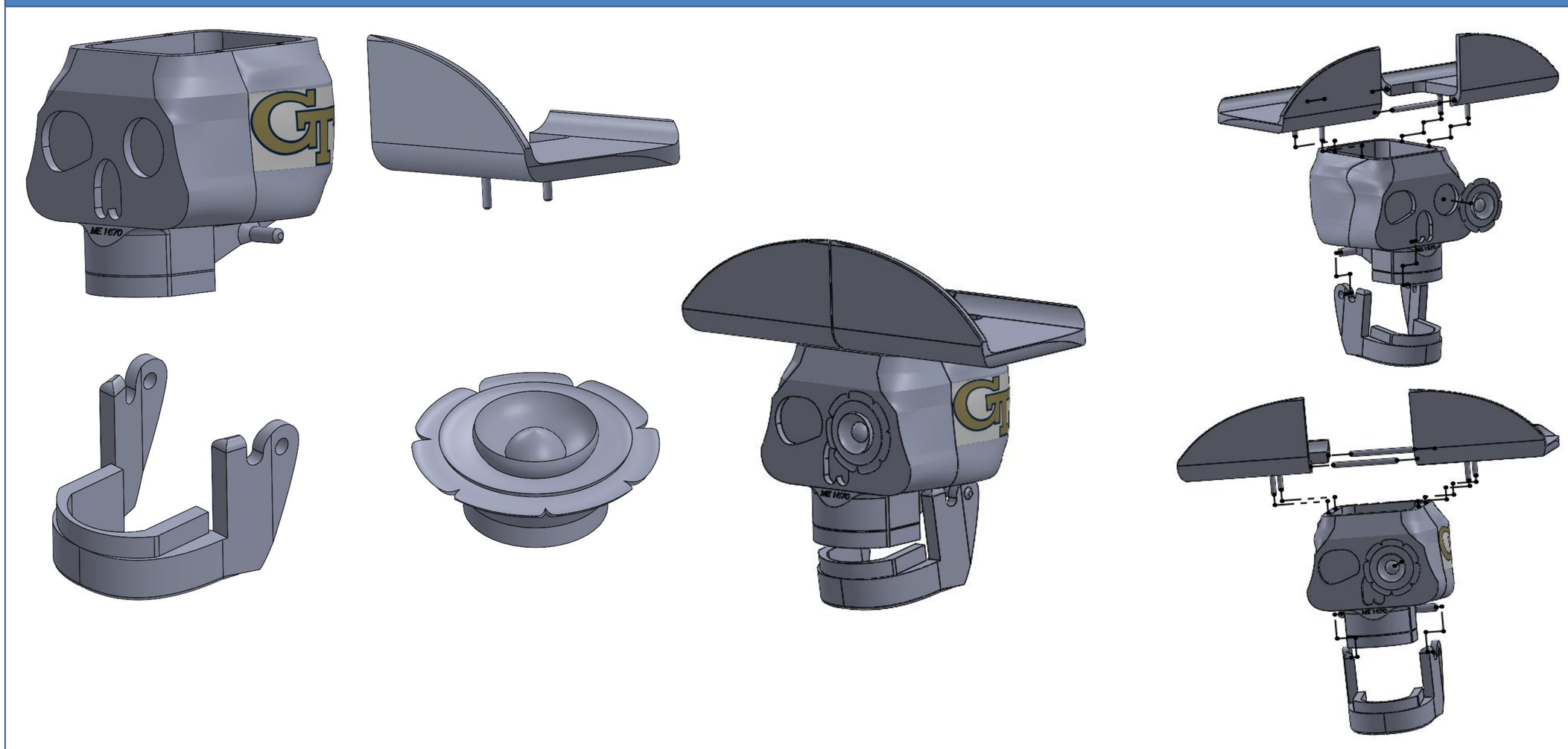

Part Working Drawings

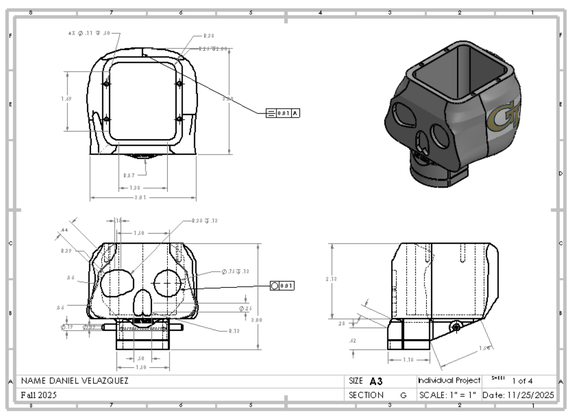

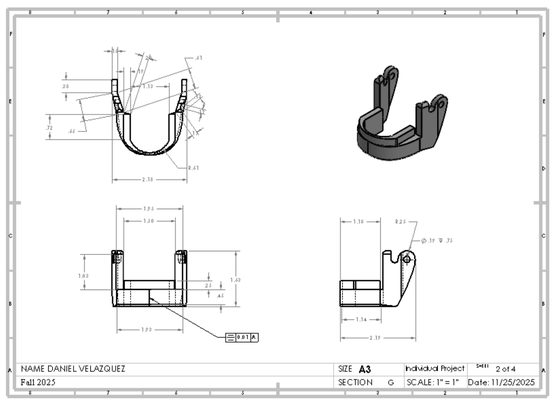

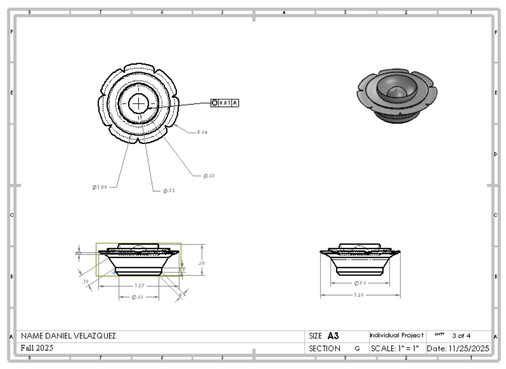

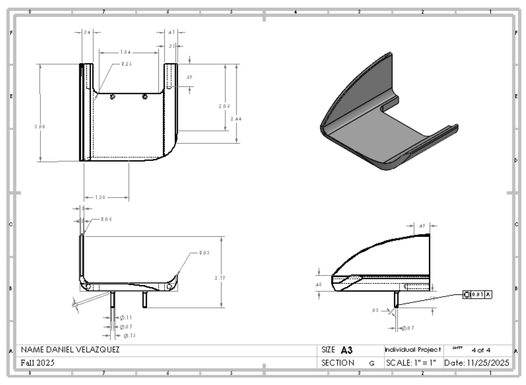

Dimensional Tolerance and GDT Tables

Parts in the assembly	Fit type	Dimensional Tolerance limits for Part A & B (in)	Max. Clearance or Interference (MMC/LMC)
Lower Jaw and Skull	Transition Fit	Lower Jaw: 0.1900 +0.0002/-0.0004 Skull: 0.1900 +0.0000/-0.0005	Max Clearance 0.0004 in (LMC)
Flower and Skull	Clearance Fit	Flower: 0.750 -0.001/-0.005 Skull: 0.750 +0.003/+0.000	Max Clearance 0.008 in (LMC)
Mariachi Hat and Skull	Transition Fit	Mariachi Hat: 0.11 +0.0003/-0.0002 Skull: 0.11 +0.0002/-0.0003	Max Clearance 0.0004 in (LMC)
Left/Right Mariachi Hat and Dower	Transition Fit	Mariachi Hat: 0.1250 +0.0002/-0.0003	Max Clearance 0.0004 in (LMC)

Part Name	Modeling Approach	Manufacturing Process	GD&T parameter to Control	Tolerance with symbol
Lower Jaw	Extrude, Extrude Cut, Hole Wizard, Fillet	Injection Molding	Position	⌀ 0.01in
Right Mariachi Hat	Extrude, Extrude Cut, Hole Wizard, Fillet	Infection Molding	Profile of a surface	⌓ 0.04in
Left Mariachi Hat	Mirror	Injection Molding	Profile of a surface	⌓ 0.04in
Skull	Loft, Extrude, Extrude Cut, Hole Wizard, Chamfer, Fillet	Casting	Profile of a surface	⌓ 0.04in
Flower	Revolve, Extrude Cut, Chamfer	Infection Molding	Concentricity	⌓ 0.02in

Exploded view with BOM Parts List

ITEM NO.	PART NUMBER	DESCRIPTION	MATERIAL	QTY.
1	Skull	Skull	Polyurethane Foam	1
2	Flower	Flower for eye socket	Silicone	1
3	Right Mariachi Hat	Right mariachi hat	LDPE	1
4	Dower	Connecting rod for hat	PLA	2
5	Left Mariachi Hat	Left mariachi hat	LDPE	1
6	Lower Jaw	Lower jaw connected to skull	Polyurethane Foam	1

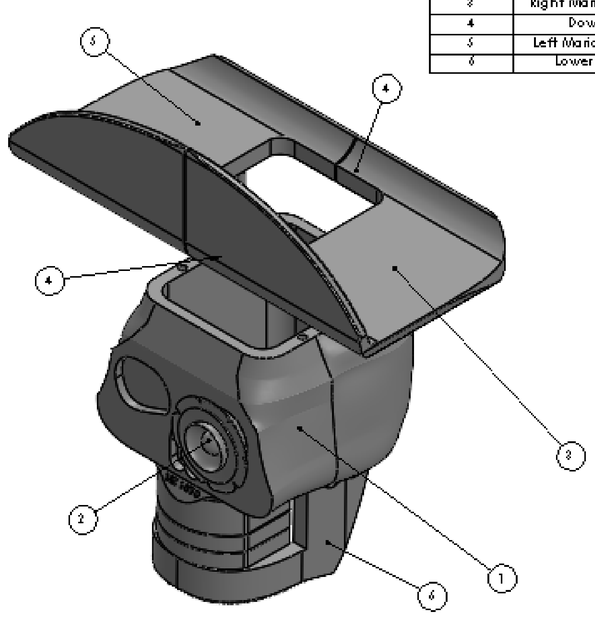

NAME DANIEL VELAZQUEZ | SIZE A3 | Individual Project | 1 of 1
Fall 2025 | SECTION G | SCALE: 1" = 1" | Date: 11/25/2025

Assembly Instructions

Step 1

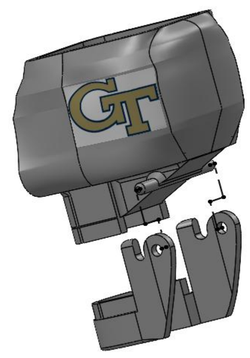

Step 2

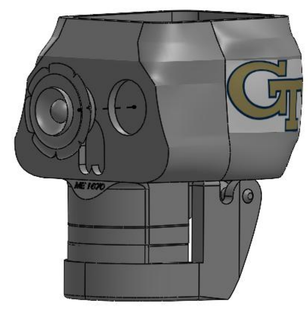

Step 3

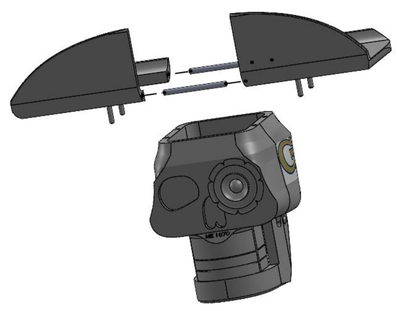

Step 4

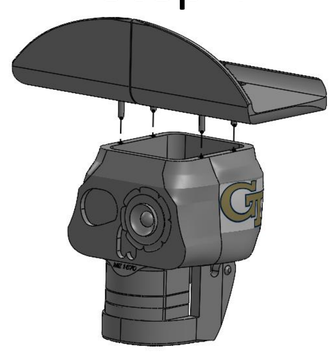

Final Assembly

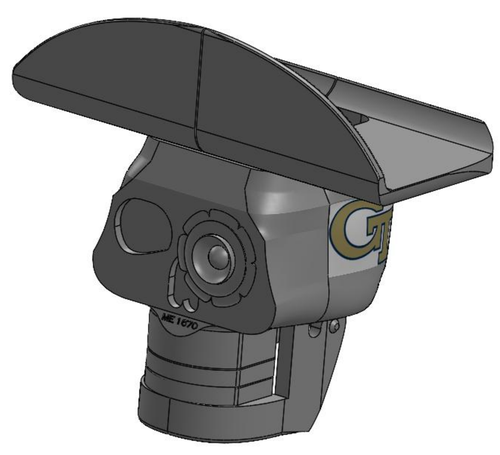
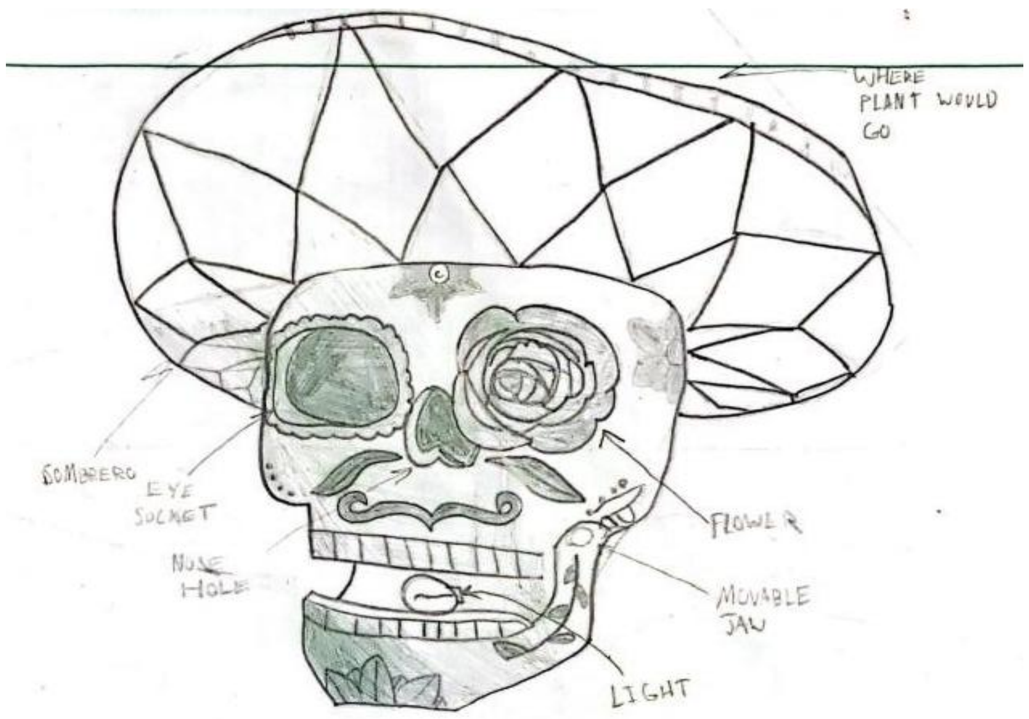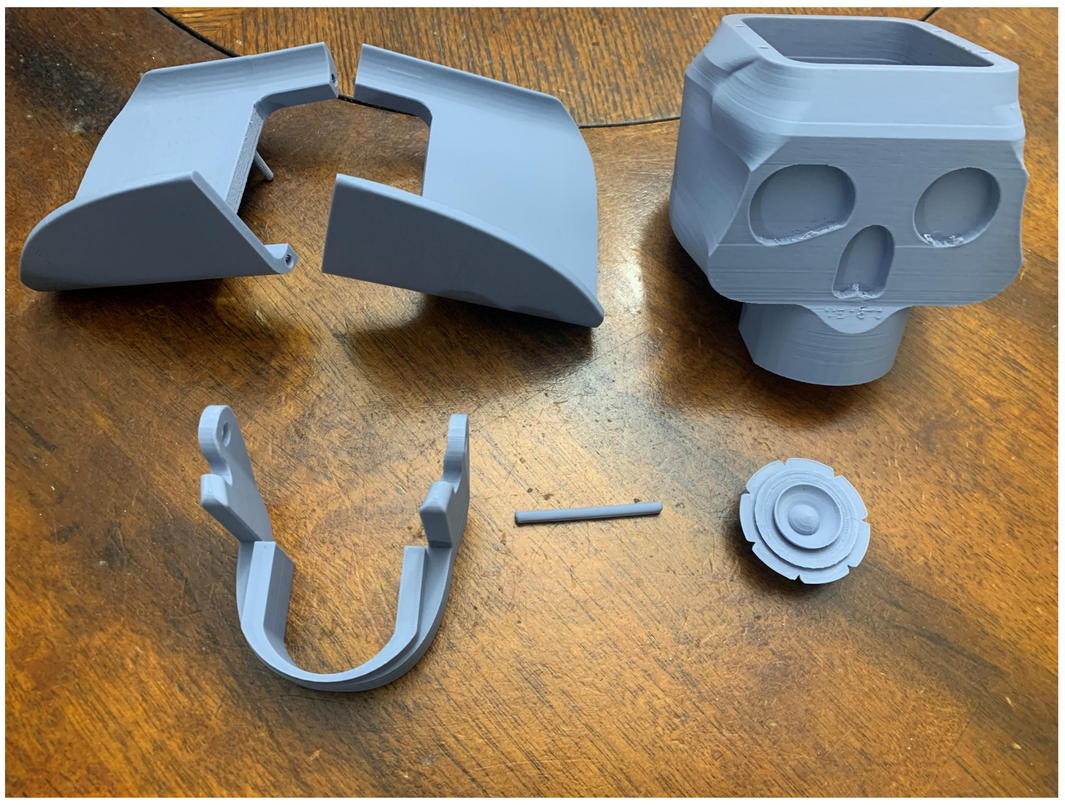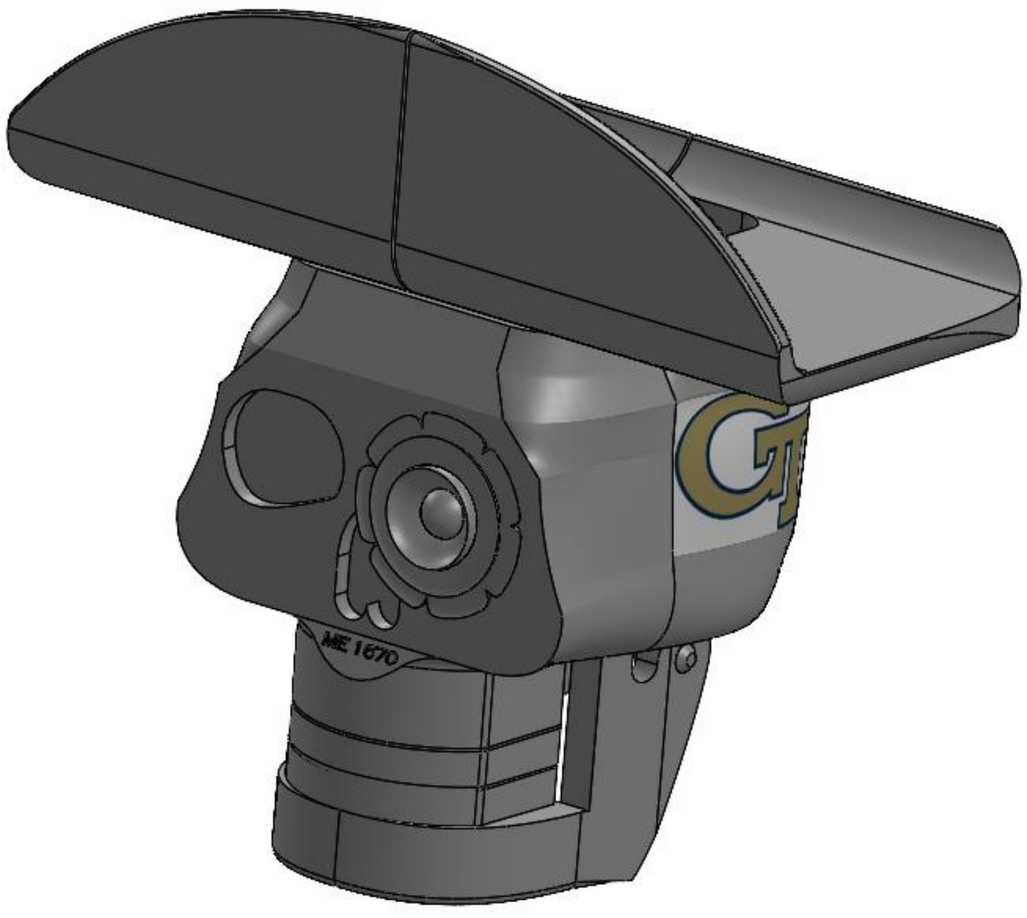
Calavera del Musico